●Part Number Guide

T-M-FF.FFFFM-LC-FTFD-OT-ESR-TR-S

T(Type 型号)：**I=5×3.2 SMD 4pads**
IB=6×3.2 SMD 2pads
M(Mode of Operation 振荡模式):**F=Fundamental**
F(Frequency 标称频率)
LC(Load Capacitance 负载电容):**20=20pf 00=series, etc**
FT(Frequency Tolerance 调整频差):**30=±30ppm, etc**
FD(Frequency Drift 频率稳定性)：**50=±50ppm, etc**
OT(Operating Temperature 工作温度):**1060=-10℃ to +60℃ 4085=-40℃ to +85℃, etc**
ESR(Equivalent Series Resistance 等效阻抗)
TR(Tape and Reel 编带)
S(Special Requirement 特殊要求)

●Electrical Specifications 电气参数

型号	Holder Type	5×3.2mm Ceramic Surface Mount
频率范围	**Frequency Range**	**8.000MHz to150.000MHz**
调整频差	**Frequency Tolerance (△F) (at25℃)**	**±10ppm to ±100ppm**
温度频差	**Frequency Stability**	**±10ppm to ±100ppm**
工作温度范围	**Operating Temperature Range**	**-10℃～+60℃ to -40℃～+85℃**
储存温度范围	**Storage Temperature Range**	**-40℃～+85℃/-55℃～+125℃**
老化	**Aging (25℃)**	**±5ppm/Year Maximum**
静电容	**Shunt Capacitance (C0)**	**7.0pF Maximum**
激励功率	**Drive Level**	**100μW Typical**
绝缘阻抗	**Insulation Resistance (Rs)**	**500 Mega ohms Minimum at D.C100V**
负载电容	**Load Capacitance (CL)**	**Suggested by customer**

• Mechanical Dimensions 外型尺寸

IB:TWO PADS（两电极）
UNIT(单位)：mm（毫米）

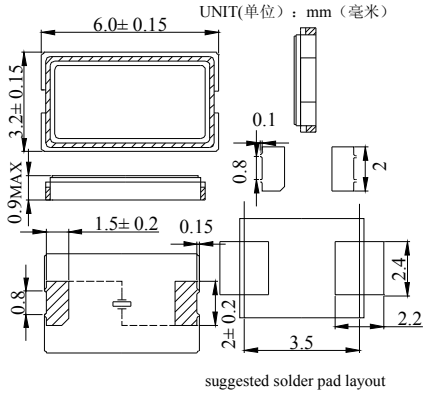

I：FOUR PADS（四电极）
UNIT(单位):mm(毫米)

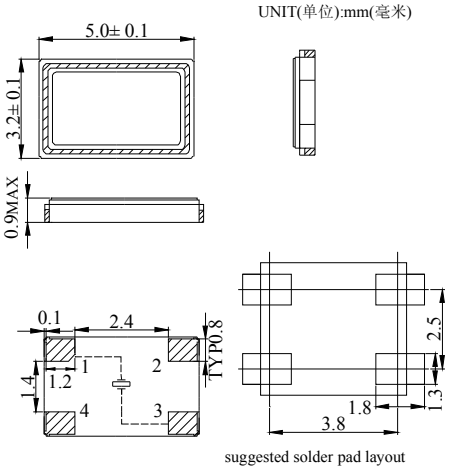

Note) #2,#4 is connected with a cover
(Please connect with a GND or a power supply)

●Equivalent Series Resistance and Mode of Operation 等效阻抗和振荡模式

Frequency Range 频率范围	ESR（Ω）等效阻抗	Mode 振荡模式
8.000-10.000 MHz	**100 Max**	**Fundamental**
10.000-12.000 MHz	**80 Max**	**Fundamental**
12.000-16.000 MHz	**60 Max**	**Fundamental**
16.000-20.000 MHz	**50 Max**	**Fundamental**
20.000-24.000 MHz	**40 Max**	**Fundamental**
24.000-50.000 MHz	**30 Max**	**Fundamental**
40.000-150.00 MHz	**80Max**	**Third Overtone**

• Reflow Condition 回流焊条件

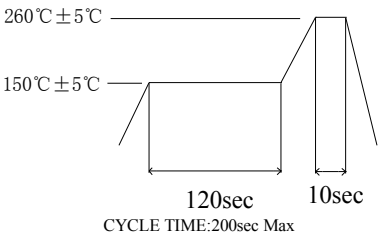

CYCLE TIME:200sec Max